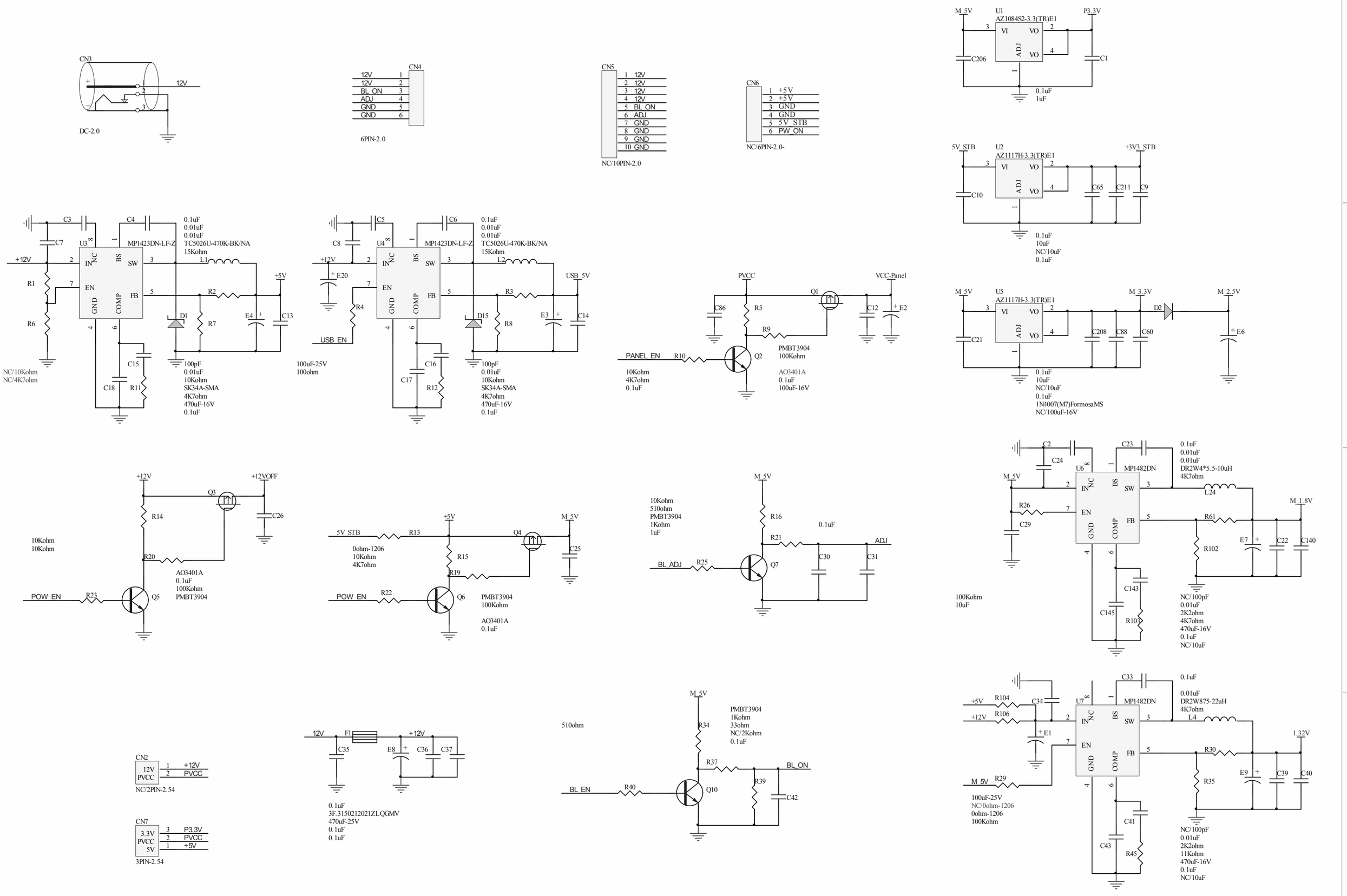
CN3
12V
DC-2.0
CN4
12V 1
12V 2
BL_ON 3
ADJ 4
GND 5
GND 6
6PIN-2.0
CN5
1 12V
2 12V
3 12V
4 12V
5 BL_ON
6 ADJ
7 GND
8 GND
9 GND
10 GND
NC/10PIN-2.0
CN6
1 +5V
2 +5V
3 GND
4 GND
5 5V_STB
6 PW_ON
NC/6PIN-2.0-
M_5V
U1
AZ1084S2-3.3(TR)E1
P3.3V
VI
VO
ADJ
C206
C1
0.1uF
1uF
5V_STB
U2
AZ1117H-3.3(TR)E1
+3V3_STB
C10
C65
C211
C9
0.1uF
10uF
NC/10uF
0.1uF
M_5V
U5
AZ1117H-3.3(TR)E1
M_3.3V
M_2.5V
D2
C21
C208
C88
C60
E6
0.1uF
10uF
NC/10uF
0.1uF
1N4007(M7)FormosaMS
NC/100uF-16V
C3
C4
C7
U3
MP1423DN-LF-Z
+12V
IN
NC
BS
SW
EN
FB
GND
COMP
R1
R6
L1
R2
R7
D1
E4
C13
C15
C18
R11
0.1uF
0.01uF
0.01uF
TC5026U-470K-BK/NA
15Kohm
100pF
0.01uF
10Kohm
SK34A-SMA
4K7ohm
470uF-16V
0.1uF
NC/10Kohm
NC/4K7ohm
C5
C6
C8
U4
MP1423DN-LF-Z
E20
R4
USB_EN
L2
R3
D15
R8
E3
C14
USB_5V
C16
C17
R12
100uF-25V
100ohm
0.1uF
0.01uF
0.01uF
TC5026U-470K-BK/NA
15Kohm
100pF
0.01uF
10Kohm
SK34A-SMA
4K7ohm
470uF-16V
0.1uF
PVCC
VCC-Panel
Q1
C86
R5
R9
C12
E2
PANEL_EN
R10
Q2
PMBT3904
100Kohm
10Kohm
4K7ohm
0.1uF
AO3401A
0.1uF
100uF-16V
+12V
+12VOFF
Q3
R14
C26
10Kohm
10Kohm
R20
AO3401A
0.1uF
100Kohm
PMBT3904
POW_EN
R23
Q5
5V_STB
R13
+5V
Q4
M_5V
C25
0ohm-1206
10Kohm
4K7ohm
R15
R19
POW_EN
R22
Q6
PMBT3904
100Kohm
AO3401A
0.1uF
10Kohm
510ohm
PMBT3904
1Kohm
1uF
M_5V
R16
0.1uF
R21
ADJ
C30
C31
BL_ADJ
R25
Q7
C2
C23
C24
U6
MP1482DN
M_5V
R26
C29
L24
M_1.8V
R61
R102
E7
C22
C140
C143
C145
R103
100Kohm
10uF
0.1uF
0.01uF
0.01uF
DR2W4*5.5-10uH
4K7ohm
NC/100pF
0.01uF
2K2ohm
4K7ohm
470uF-16V
0.1uF
NC/10uF
CN2
12V
PVCC
1 +12V
2 PVCC
NC/2PIN-2.54
CN7
3.3V
PVCC
5V
3 P3.3V
2 PVCC
1 +5V
3PIN-2.54
12V
F1
+12V
C35
E8
C36
C37
0.1uF
3F.3150212021ZLQGMV
470uF-25V
0.1uF
0.1uF
M_5V
510ohm
PMBT3904
1Kohm
33ohm
NC/2Kohm
0.1uF
R34
R37
BL_ON
R39
C42
BL_EN
R40
Q10
C33
0.1uF
0.01uF
DR2W875-22uH
4K7ohm
+5V
R104
C34
+12V
R106
E1
U7
MP1482DN
L4
1.32V
R30
R35
E9
C39
C40
M_5V
R29
100uF-25V
NC/0ohm-1206
0ohm-1206
100Kohm
C41
C43
R45
NC/100pF
0.01uF
2K2ohm
11Kohm
470uF-16V
0.1uF
NC/10uF

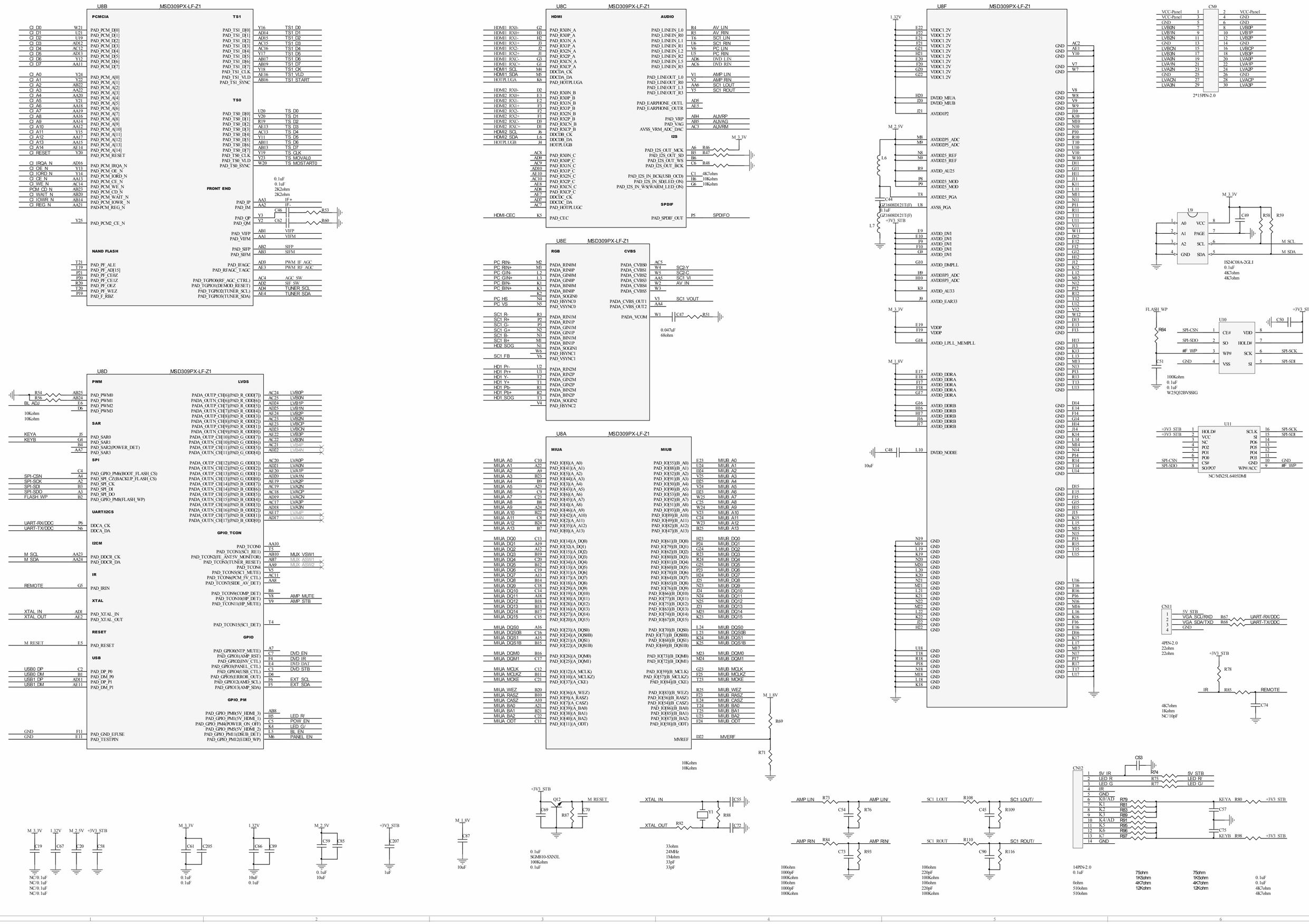
U8B MSD309PX-LF-Z1
PCMCIA
CI_D0 W21 PAD_PCM_D[0]
CI_D1 U21 PAD_PCM_D[1]
CI_D2 U19 PAD_PCM_D[2]
CI_D3 AD12 PAD_PCM_D[3]
CI_D4 AC12 PAD_PCM_D[4]
CI_D5 AD13 PAD_PCM_D[5]
CI_D6 Y12 PAD_PCM_D[6]
CI_D7 AA11 PAD_PCM_D[7]
CI_A0 Y24 PAD_PCM_A[0]
CI_A1 Y22 PAD_PCM_A[1]
CI_A2 AB22 PAD_PCM_A[2]
CI_A3 AA22 PAD_PCM_A[3]
CI_A4 AA20 PAD_PCM_A[4]
CI_A5 Y21 PAD_PCM_A[5]
CI_A6 AA18 PAD_PCM_A[6]
CI_A7 AA19 PAD_PCM_A[7]
CI_A8 AA16 PAD_PCM_A[8]
CI_A9 AA14 PAD_PCM_A[9]
CI_A10 AA12 PAD_PCM_A[10]
CI_A11 Y15 PAD_PCM_A[11]
CI_A12 AA17 PAD_PCM_A[12]
CI_A13 AA15 PAD_PCM_A[13]
CI_A14 AE14 PAD_PCM_A[14]
CI_RESET Y20 PAD_PCM_RESET
CI_IRQA_N AD16 PAD_PCM_IRQA_N
CI_OE_N Y13 PAD_PCM_OE_N
CI_IORD_N Y14 PAD_PCM_IORD_N
CI_CE_N AA13 PAD_PCM_CE_N
CI_WE_N AC14 PAD_PCM_WE_N
PCM_CD_N AB23 PAD_PCM_CD_N
CI_WAIT_N AB20 PAD_PCM_WAIT_N
CI_IOWR_N AB14 PAD_PCM_IOWR_N
CI_REG_N AA21 PAD-PCM_REG_N
Y25 PAD_PCM2_CE_N
NAND FLASH
T21 PAD_PF_ALE
T19 PAD_PF_AD[15]
P21 PAD_PF_CE0Z
P20 PAD_PF_CE1Z
R20 PAD_PF_OEZ
T20 PAD_PF_WEZ
P19 PAD_F_RBZ
TS1
PAD_TS1_D[0] Y16 TS1_D0
PAD_TS1_D[1] AD14 TS1_D1
PAD_TS1_D[2] AD15 TS1_D2
PAD_TS1_D[3] AC15 TS1_D3
PAD_TS1_D[4] AC16 TS1_D4
PAD_TS1_D[5] Y17 TS1_D5
PAD_TS1_D[6] AB17 TS1_D6
PAD_TS1_D[7] AB19 TS1_D7
PAD_TS1_CLK Y18 TS1_CK
PAD_TS1_VLD AE16 TS1_VLD
PAD_TS1_SYNC AB16 TS1_START
TS0
PAD_TS0_D[0] U20 TS_D0
PAD_TS0_D[1] V20 TS_D1
PAD_TS0_D[2] R19 TS_D2
PAD_TS0_D[3] AE13 TS_D3
PAD_TS0_D[4] AC13 TS_D4
PAD_TS0_D[5] Y11 TS_D5
PAD_TS0_D[6] AB11 TS_D6
PAD_TS0_D[7] AB13 TS_D7
PAD_TS0_CLK Y19 TS_CLK
PAD_TS0_VLD Y23 TS_MOVALO
PAD_TS0_SYNC W20 TS_MOSTART0
FRONT END
0.1uF
0.1uF
2K2ohm
2K2ohm
PAD_IP AA3 IF+
PAD_IM AA2 IF-
C46 R53
PAD_QP Y3
PAD_QM Y2 C62 R60
PAD_VIFP AB1 VIFP
PAD_VIFM AA1 VIFM
PAD_SIFP AB2 SIFP
PAD_SIFM AB3 SIFM
PAD_IFAGC AD3 PWM_IF_AGC
PAD_RFAGC_TAGC AE3 PWM_RF_AGC
PAD_TGPIO0(RF_AGC_CTRL) AC4 AGC_SW
PAD_TGPIO1(DEMOD_RESET) AD2 SIF_SW
PAD_TGPIO2(TUNER_SCL) AD4 TUNER_SCL
PAD_TGPIO3(TUNER_SDA) AE4 TUNER_SDA
U8C MSD309PX-LF-Z1
HDMI
HDMI1_RX0- G2
HDMI1_RX0+ H3
HDMI1_RX1- H2
HDMI1_RX1+ J3
HDMI1_RX2- J2
HDMI1_RX2+ J1
HDMI1_RXC- G3
HDMI1_RXC+ G1
HDMI1_SCL M4
HDMI1_SDA M5
HOTPLUGA K6
HDMI2_RX0- D2
HDMI2_RX0+ E3
HDMI2_RX1- E2
HDMI2_RX1+ F3
HDMI2_RX2- F2
HDMI2_RX2+ F1
HDMI2_RXC- D3
HDMI2_RXC+ D1
HDMI2_SCL J6
HDMI2_SDA L6
HOTPLUGB J4
AC8 PAD_RX0N_C
AD9 PAD_RX0P_C
AC9 PAD_RX1N_C
AD10 PAD_RX1P_C
AE10 PAD_RX2N_C
AC10 PAD_RX2P_C
AE8 PAD_RXCN_C
AD8 PAD_RXCP_C
AE7 DDCDC_CK
AD7 DDCDC_DA
AC7 PAD_HOTPLUGC
HDMI-CEC K5 PAD_CEC
AUDIO
PAD_LINEIN_L0 R4 AV_LIN
PAD_LINEIN_R0 R5 AV_RIN
PAD_LINEIN_L1 T6 SC1_LIN
PAD_LINEIN_R1 U6 SC1_RIN
PAD_LINEIN_L2 V6 PC_LIN
PAD_LINEIN_R2 U5 PC_RIN
PAD_LINEIN_L5 AD6 DVD_LIN
PAD_LINEIN_R5 AC6 DVD_RIN
PAD_LINEOUT_L0 V1 AMP_LIN
PAD_LINEOUT_R0 V2 AMP_RIN
PAD_LINEOUT_L3 AA6 SC1_LOUT
PAD_LINEOUT_R3 Y5 SC1_ROUT
PAD_EARPHONE_OUTL AD5
PAD_EARPHONE_OUTR AE5
PAD_VRP AB4 AUVRP
PAD_VAG AB5 AUVAG
AVSS_VRM_ADC_DAC AC3 AUVRM
I2S
M_3.3V
PAD_I2S_OUT_MCK A6 R46
PAD_I2S_OUT_SD B5 R47
PAD_I2S_OUT_WS B6
PAD_I2S_OUT_BCK C6 R48
PAD_I2S_IN_BCK(USB_OCD) C1 4K7ohm
PAD_I2S_IN_SD(LED_ON) H6 10Kohm
PAD_I2S_IN_WS(WARM_LED_ON) G6 10Kohm
SPDIF
PAD_SPDIF_OUT P5 SPDIFO
U8E MSD309PX-LF-Z1
RGB
PC_RIN- M2
PC_RIN+ M3
PC_GIN- L2
PC_GIN+ L3
PC_BIN- K1
PC_BIN+ K3
K2
PC_HS N4
PC_VS N5
SC1_R- R3
SC1_R+ P2
SC1_G- P3
SC1_G+ N2
SC1_B- N3
SC1_B+ M1
HD2_SOG N1
W6
SC1_FB Y6
HD1_Pr- U2
HD1_Pr+ U3
HD1_Y- T2
HD1_Y+ T1
HD1_Pb- R1
HD1_Pb+ R2
HD1_SOG T3
V4
PADA_RIN0M
PADA_RIN0P
PADA_GIN0M
PADA_GIN0P
PADA_BIN0M
PADA_BIN0P
PADA_SOGIN0
PAD_HSYNC0
PAD_VSYNC0
PADA_RIN1M
PADA_RIN1P
PADA_GIN1M
PADA_GIN1P
PADA_BIN1M
PADA_BIN1P
PADA_SOGIN1
PAD_HSYNC1
PAD_VSYNC1
PADA_RIN2M
PADA_RIN2P
PADA_GIN2M
PADA_GIN2P
PADA_BIN2M
PADA_BIN2P
PADA_SOGIN2
PAD_HSYNC2
CVBS
PADA_CVBS0 AC5
PADA_CVBS1 W4 SC2-Y
PADA_CVBS2 W5 SC2-C
PADA_CVBS3 AA5 SC1_VI
PADA_CVBS4 W2 AV_IN
PADA_CVBS5 W3
PADA_CVBS_OUT1 V3 SC1_VOUT
PADA_CVBS_OUT2 AA4
PADA_VCOM W1 C47 R51
0.047uF
68ohm
U8D MSD309PX-LF-Z1
PWM
R54 AB25
R56 AB24
BL_ADJ E6
D6
10Kohm
10Kohm
PAD_PWM0
PAD_PWM1
PAD_PWM2
PAD_PWM3
SAR
KEYA J5
KEYB G4
B4
AA7
PAD_SAR0
PAD_SAR1
PAD_SAR2(POWER_DET)
PAD_SAR3
SPI
C4
SPI-CSN A4 PAD_GPIO_PM6(BOOT_FLASH_CS)
SPI-SCK A2 PAD_SPI_CZ(BACKUP_FLASH_CS)
SPI-SDI B3 PAD_SPI_CK
SPI-SDO A3 PAD_SPI_DI
FLASH_WP B2 PAD_SPI_DO
PAD_GPIO_PM8(FLASH_WP)
UART/I2CS
UART-RX/DDC P6 DDCA_CK
UART-TX/DDC N6 DDCA_DA
I2CM
M_SCL AA23 PAD_DDCR_CK
M_SDA AA24 PAD_DDCR_DA
IR
REMOTE G5 PAD_IRIN
XTAL
XTAL_IN AD1 PAD_XTAL_IN
XTAL_OUT AE2 PAD_XTAL_OUT
RESET
M_RESET E5 PAD_RESET
USB
USB0_DP C2 PAD_DP_P0
USB0_DM B1 PAD_DM_P0
USB1_DP AD11 PAD_DP_P1
USB1_DM AE11 PAD_DM_P1
LVDS
PADA_OUTP_CH[6](PAD_R_ODD[7]) AC24 LVB0P
PADA_OUTN_CH[6](PAD_R_ODD[6]) AC25 LVB0N
PADA_OUTP_CH[7](PAD_R_ODD[5]) AD24 LVB1P
PADA_OUTN_CH[7](PAD_R_ODD[4]) AD25 LVB1N
PADA_OUTP_CH[8](PAD_R_ODD[3]) AE24 LVB2P
PADA_OUTN_CH[8](PAD_R_ODD[2]) AE25 LVB2N
PADA_OUTP_CH[9](PAD_R_ODD[1]) AD23 LVBCP
PADA_OUTN_CH[9](PAD_R_ODD[0]) AD21 LVBCN
PADA_OUTP_CH[10](PAD_G_ODD[7]) AE22 LVB3P
PADA_OUTN_CH[10](PAD_G_ODD[6]) AC22 LVB3N
PADA_OUTP_CH[11](PAD_G_ODD[5]) AC21 LVB4P
PADA_OUTN_CH[11](PAD_G_ODD[4]) AD22 LVB4N
PADA_OUTP_CH[12](PAD_G_ODD[3]) AC20 LVA0P
PADA_OUTN_CH[12](PAD_G_ODD[2]) AD21 LVA0N
PADA_OUTP_CH[13](PAD_G_ODD[1]) AE20 LVA1P
PADA_OUTN_CH[13](PAD_G_ODD[0]) AD20 LVA1N
PADA_OUTP_CH[14](PAD_B_ODD[7]) AE19 LVA2P
PADA_OUTN_CH[14](PAD_B_ODD[6]) AC19 LVA2N
PADA_OUTP_CH[15](PAD_B_ODD[5]) AC18 LVACP
PADA_OUTN_CH[15](PAD_B_ODD[4]) AD19 LVACN
PADA_OUTP_CH[16](PAD_B_ODD[3]) AC17 LVA3P
PADA_OUTN_CH[16](PAD_B_ODD[2]) AD18 LVA3N
PADA_OUTP_CH[17](PAD_B_ODD[1]) AE17 LVA4P
PADA_OUTN_CH[17](PAD_B_ODD[0]) AD17 LVA4N
GPIO_TCON
PAD_TCON0 AA10
PAD_TCON1(SC1_RE1) T5
PAD_TCON2(FE_ANT5V_MONITOR) AB10 MUX_VSW1
PAD_TCON3(TUNER_RESET) AB7 MUX_ASW1
PAD_TCON4 AA9 MUX_ASW2
PAD_TCON5(SC1_MUTE) Y5
PAD_TCON6(PCM_5V_CTL) AC11
PAD_TCON7(SIDE_AV_DET) AA8
PAD_TCON8(COMP_DET) R6
PAD_TCON10(HP_DET) Y8 AMP_MUTE
PAD_TCON11(HP_MUTE) Y9 AMP_STB
PAD_TCON15(SC1_DET) T4
GPIO
PAD_GPIO0(NTP_MUTE) A7
PAD_GPIO1(AMP_RST) C7 DVD_EN
PAD_GPIO2(INV_CTL) F4 DVD_IR
PAD_GPIO3(PANEL_CTL) E4 DVD_DAT
PAD_GPIO4(USB_CTL) C3 DVD_STB
PAD_GPIO5(ERROR_OUT) D4
PAD_GPIO12(AMP_SCL) F6 EXT_SCL
PAD_GPIO13(AMP_SDA) F5 EXT_SDA
GPIO_PM
PAD_GPIO_PM0(5V_HDMI_3) AB8
PAD_GPIO_PM1(5V_HDMI_1) H5 LED_R/
PAD_GPIO_PM4(POWER_ON_OFF) C5 POW_EN
PAD_GPIO_PM5(5V_HDMI_2) K4 LED_G/
PAD_GPIO_PM11(DSUB_DET) L5 BL_EN
PAD_GPIO_PM12(EDID_WP) M6 PANEL_EN
GND F11 PAD_GND_EFUSE
GND E11 PAD_TESTPIN
U8A MSD309PX-LF-Z1
MIUA
MIUA_A0 C10 PAD_IO[8](A_A0)
MIUA_A1 A22 PAD_IO[41](A_A1)
MIUA_A2 A9 PAD_IO[42](A_A2)
MIUA_A3 B23 PAD_IO[44](A_A3)
MIUA_A4 B9 PAD_IO[3](A_A4)
MIUA_A5 A23 PAD_IO[43](A_A5)
MIUA_A6 C9 PAD_IO[6](A_A6)
MIUA_A7 C23 PAD_IO[45](A_A7)
MIUA_A8 B8 PAD_IO[48](A_A8)
MIUA_A9 A24 PAD_IO[46](A_A9)
MIUA_A10 B22 PAD_IO[42](A_A10)
MIUA_A11 C8 PAD_IO[2](A_A11)
MIUA_A12 B24 PAD_IO[83](B_A12)
MIUA_A13 B7 PAD_IO[0](A_A13)
MIUA_DQ0 C13 PAD_IO[14](A_DQ0)
MIUA_DQ1 A19 PAD_IO[32](A_DQ1)
MIUA_DQ2 A12 PAD_IO[15](A_DQ2)
MIUA_DQ3 B19 PAD_IO[33](A_DQ3)
MIUA_DQ4 C20 PAD_IO[34](A_DQ4)
MIUA_DQ5 B12 PAD_IO[13](A_DQ5)
MIUA_DQ6 C19 PAD_IO[31](A_DQ6)
MIUA_DQ7 A13 PAD_IO[17](A_DQ7)
MIUA_DQ8 B14 PAD_IO[18](A_DQ8)
MIUA_DQ9 C18 PAD_IO[29](A_DQ9)
MIUA_DQ10 C14 PAD_IO[19](A_DQ10)
MIUA_DQ11 A18 PAD_IO[30](A_DQ11)
MIUA_DQ12 B18 PAD_IO[28](A_DQ12)
MIUA_DQ13 B13 PAD_IO[16](A_DQ13)
MIUA_DQ14 B17 PAD_IO[27](A_DQ14)
MIUA_DQ15 C15 PAD_IO[20](A_DQ15)
MIUA_DQS0 A16 PAD_IO[23](A_DQS0)
MIUA_DQS0B C16 PAD_IO[24](A_DQS0B)
MIUA_DQS1 A15 PAD_IO[21](A_DQS1)
MIUA_DQS1B B15 PAD_IO[22](A_DQS1B)
MIUA_DQM0 B16 PAD_IO[26](A_DQM0)
MIUA_DQM1 C17 PAD_IO[25](A_DQM1)
MIUA_MCLK C12 PAD_IO[12](A_MCLK)
MIUA_MCLKZ B11 PAD_IO[10](A_MCLKZ)
MIUA_MCKE C21 PAD_IO[37](A_CKE)
MIUA_WEZ B20 PAD_IO[36](A_WEZ)
MIUA_RASZ B10 PAD_IO[9](A_RASZ)
MIUA_CASZ A10 PAD_IO[7](A_CASZ)
MIUA_BA0 A21 PAD_IO[39](A_BA0)
MIUA_BA1 B21 PAD_IO[38](A_BA1)
MIUA_BA2 C22 PAD_IO[40](A_BA2)
MIUA_ODT C11 PAD_IO[11](A_ODT)
MIUB
PAD_IO[55](B_A0) E23 MIUB_A0
PAD_IO[88](B_A1) U24 MIUB_A1
PAD_IO[52](B_A2) D24 MIUB_A2
PAD_IO[91](B_A3) V25 MIUB_A3
PAD_IO[50](B_A4) D25 MIUB_A4
PAD_IO[90](B_A5) V24 MIUB_A5
PAD_IO[53](B_A6) D23 MIUB_A6
PAD_IO[92](B_A7) W25 MIUB_A7
PAD_IO[51](B_A8) C25 MIUB_A8
PAD_IO[93](B_A9) W24 MIUB_A9
PAD_IO[89](B_A10) V23 MIUB_A10
PAD_IO[49](B_A11) C24 MIUB_A11
PAD_IO[82](B_A12) W23 MIUB_A12
PAD_IO[47](B_A13) B25 MIUB_A13
PAD_IO[61](B_DQ0) H23 MIUB_DQ0
PAD_IO[79](B_DQ1) P24 MIUB_DQ1
PAD_IO[62](B_DQ2) G24 MIUB_DQ2
PAD_IO[80](B_DQ3) R23 MIUB_DQ3
PAD_IO[81](B_DQ4) R24 MIUB_DQ4
PAD_IO[60](B_DQ5) G25 MIUB_DQ5
PAD_IO[78](B_DQ6) P23 MIUB_DQ6
PAD_IO[64](B_DQ7) H24 MIUB_DQ7
PAD_IO[65](B_DQ8) J25 MIUB_DQ8
PAD_IO[76](B_DQ9) N23 MIUB_DQ9
PAD_IO[66](B_DQ10) J24 MIUB_DQ10
PAD_IO[77](B_DQ11) N24 MIUB_DQ11
PAD_IO[75](B_DQ12) N25 MIUB_DQ12
PAD_IO[63](B_DQ13) J23 MIUB_DQ13
PAD_IO[74](B_DQ14) M25 MIUB_DQ14
PAD_IO[67](B_DQ15) K23 MIUB_DQ15
PAD_IO[70](B_DQS0) L24 MIUB_DQS0
PAD_IO[71](B_DQS0B) L23 MIUB_DQS0B
PAD_IO[68](B_DQS1) K24 MIUB_DQS1
PAD_IO[69](B_DQS1B) K25 MIUB_DQS1B
PAD_IO[73](B_DQM0) M23 MIUB_DQM0
PAD_IO[72](B_DQM1) M24 MIUB_DQM1
PAD_IO[59](B_MCLK) G23 MIUB_MCLK
PAD_IO[57](B_MCLKZ) E25 MIUB_MCLKZ
PAD_IO[84](B_CKE) T23 MIUB_MCKE
PAD_IO[83](B_WEZ) R25 MIUB_WEZ
PAD_IO[56](B_RASZ) F23 MIUB_RASZ
PAD_IO[54](B_CASZ) E24 MIUB_CASZ
PAD_IO[86](B_BA0) T24 MIUB_BA0
PAD_IO[85](B_BA1) T25 MIUB_BA1
PAD_IO[87](B_BA2) U23 MIUB_BA2
PAD_IO[58](B_ODT) F24 MIUB_ODT
MVREF D22 MVERF
M_1.8V
R69
R71
10Kohm
10Kohm
U8F MSD309PX-LF-Z1
1.32V
E22 VDDC1.2V
F22 VDDC1.2V
E21 VDDC1.2V
F21 VDDC1.2V
G21 VDDC1.2V
H21 VDDC1.2V
E20 VDDC1.2V
F20 VDDC1.2V
G20 VDDC1.2V
G22 VDDC1.2V
H20 DVDD_MIUA
J20 DVDD_MIUB
J21 AVDDI2P2
M_2.5V
M8 AVDD2P5_ADC
M9 AVDD2P5_ADC
N8 AVDD25_REF
N9 AVDD25_REF
R9 AVDD_AU25
P8 AVDD25_MOD
P9 AVDD25_MOD
T8 AVDD25_PGA
L6
C44
GZ1608D121T(F)
0.1uF
GZ1608D121T(F)
+3V3_STB
L7
U8 AVSS_PGA
E9 AVDD_DVI
E10 AVDD_DVI
F9 AVDD_DVI
F10 AVDD_DVI
G9 AVDD_DVI
G10 AVDD_DMPLL
H9 AVDD3P3_ADC
H10 AVDD3P3_ADC
K9 AVDD_AU33
J9 AVDD_EAR33
M_3.3V
E19 VDDP
F19 VDDP
G18 AVDD_LPLL_MEMPLL
M_1.8V
E17 AVDD_DDRA
E18 AVDD_DDRA
F17 AVDD_DDRA
F18 AVDD_DDRA
G17 AVDD_DDRA
G16 AVDD_DDRB
H16 AVDD_DDRB
H17 AVDD_DDRB
J16 AVDD_DDRB
J17 AVDD_DDRB
C48 L10
10uF
DVDD_NODIE
N19 GND
M19 GND
L19 GND
K19 GND
N20 GND
M20 GND
L20 GND
K20 GND
N21 GND
M21 GND
L21 GND
K21 GND
N22 GND
M22 GND
L22 GND
K22 GND
J22 GND
H22 GND
U18 GND
T18 GND
R18 GND
P18 GND
N18 GND
M18 GND
L18 GND
K18 GND
AC2 GND
AE1 GND
Y10 GND
V7 GND
W7 GND
V8 GND
W8 GND
V9 GND
W9 GND
J10 GND
K10 GND
M10 GND
N10 GND
P10 GND
R10 GND
T10 GND
U10 GND
V10 GND
W10 GND
D11 GND
G11 GND
H11 GND
J11 GND
K11 GND
L11 GND
M11 GND
N11 GND
P11 GND
R11 GND
T11 GND
U11 GND
V11 GND
W11 GND
D12 GND
E12 GND
F12 GND
G12 GND
H12 GND
J12 GND
K12 GND
L12 GND
M12 GND
N12 GND
P12 GND
R12 GND
T12 GND
U12 GND
V12 GND
W12 GND
D13 GND
E13 GND
F13 GND
H13 GND
J13 GND
K13 GND
L13 GND
M13 GND
N13 GND
P13 GND
R13 GND
T13 GND
U13 GND
D14 GND
E14 GND
F14 GND
G14 GND
H14 GND
J14 GND
K14 GND
L14 GND
M14 GND
N14 GND
P14 GND
R14 GND
T14 GND
U14 GND
D15 GND
E15 GND
F15 GND
G15 GND
H15 GND
J15 GND
K15 GND
L15 GND
M15 GND
N15 GND
P15 GND
R15 GND
T15 GND
U15 GND
U16 GND
T16 GND
R16 GND
P16 GND
N16 GND
M16 GND
L16 GND
K16 GND
F16 GND
E16 GND
D16 GND
K17 GND
L17 GND
M17 GND
N17 GND
P17 GND
R17 GND
T17 GND
U17 GND
CN9
VCC-Panel 1 2 VCC-Panel
VCC-Panel 3 4 GND
GND 5 6 GND
LVB0N 7 8 LVB0P
LVB1N 9 10 LVB1P
LVB2N 11 12 LVB2P
GND 13 14 GND
LVBCN 15 16 LVBCP
LVB3N 17 18 LVB3P
LVA0N 19 20 LVA0P
LVA1N 21 22 LVA1P
LVA2N 23 24 LVA2P
GND 25 26 GND
LVACN 27 28 LVACP
LVA3N 29 30 LVA3P
2*15PIN-2.0
M_3.3V
U9
A0 VCC
A1 PAGE
A2 SCL
GND SDA
C49 R58 R59
M_SCL
M_SDA
IS24C08A-2GLI
0.1uF
4K7ohm
4K7ohm
FLASH_WP
R54
SPI-CSN
SPI-SDO
#F_WP
GND
C51
100Kohm
0.1uF
0.1uF
W25Q32BVSSIG
U10
CE# VDD
SO HOLD#
WP# SCK
VSS SI
+3V3_STB
C50
SPI-SCK
SPI-SDI
U11
+3V3_STB 1 HOLD# SCLK 16 SPI-SCK
+3V3_STB 2 VCC SI 15 SPI-SDI
3 NC PO6 14
4 PO2 PO5 13
5 PO1 PO4 12
6 PO0 PO3 11
SPI-CSN 7 CS# GND 10 GND
SPI-SDO 8 SO/PO7 WP#/ACC 9 #F_WP
NC/MX25L6405MII
CN11
1 5V_STB
2 VGA_SCL/RXD R67 UART-RX/DDC
3 VGA_SDA/TXD R68 UART-TX/DDC
4 GND
4PIN-2.0
22ohm
22ohm
+3V3_STB
R78
IR R85 REMOTE
4K7ohm
1Kohm
NC/10pF
C74
M_3.3V 1.32V M_2.5V +3V3_STB
C19 C67 C20 C58
NC/0.1uF
NC/0.1uF
NC/0.1uF
NC/0.1uF
M_3.3V
C61 C205
0.1uF
0.1uF
1.32V
C66 C89
10uF
0.1uF
M_2.5V
C59 C85
0.1uF
10uF
+3V3_STB
C207
1uF
M_1.8V
C87
10uF
+3V3_STB
Q12
M_RESET
C69 R87 C70
0.1uF
SGM810-SXN3L
100Kohm
0.1uF
XTAL_IN
C55
Y1
R88
XTAL_OUT
R92
C72
33ohm
24MHz
1Mohm
33pF
33pF
AMP_LIN R73 AMP_LIN/
C54 R76
AMP_RIN R84 AMP_RIN/
C73 R93
100ohm
1000pF
100Kohm
100ohm
1000pF
100Kohm
SC1_LOUT R108 SC1_LOUT/
C45 R109
SC1_ROUT R110 SC1_ROUT/
C90 R116
100ohm
220pF
100Kohm
100ohm
220pF
100Kohm
C53
CN12
1 5V_IR
2 LED_R R75 LED_R/
3 LED_G R77 LED_G/
4 IR
5 GND
6 K0/AD R79 KEYA_R80 +3V3_STB
7 K1 R81
8 K2 R83 C57
9 K3 R89
10 K4/AD R91
11 K5 R95 C75
12 K6 R96
13 K7 R97 KEYB_R98 +3V3_STB
14 GND
14PIN-2.0
0.1uF
0ohm
510ohm
510ohm
75ohm
1K5ohm
4K7ohm
12Kohm
75ohm
1K5ohm
4K7ohm
12Kohm
0.1uF
0.1uF
4K7ohm
4K7ohm

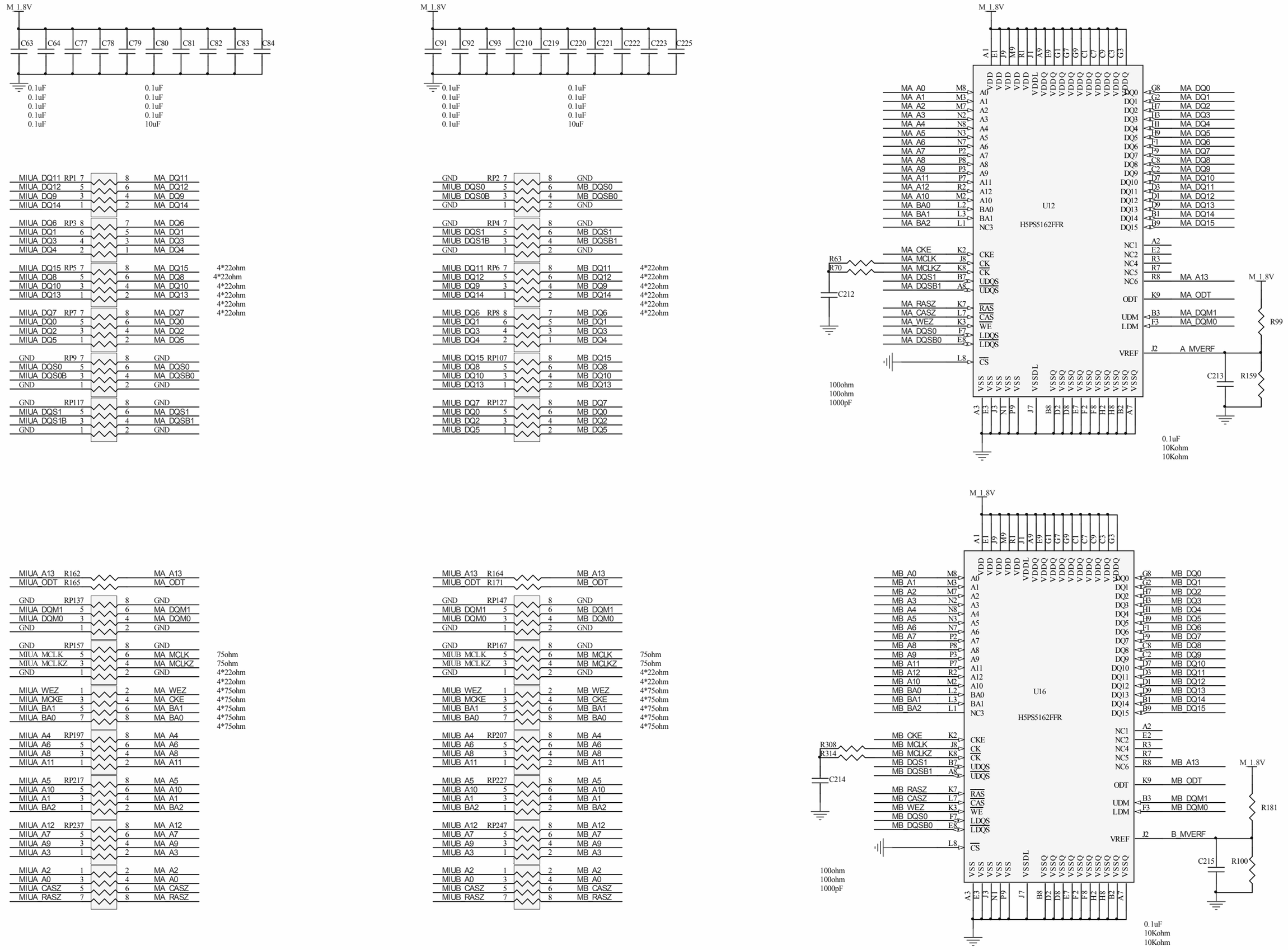
M_1.8V
C63 C64 C77 C78 C79 C80 C81 C82 C83 C84
0.1uF 0.1uF 0.1uF 0.1uF 0.1uF
0.1uF 0.1uF 0.1uF 0.1uF 10uF
C91 C92 C93 C210 C219 C220 C221 C222 C223 C225
0.1uF 0.1uF 0.1uF 0.1uF 0.1uF
0.1uF 0.1uF 0.1uF 0.1uF 10uF
MIUA_DQ11 RP1 MA_DQ11
MIUA_DQ12 MA_DQ12
MIUA_DQ9 MA_DQ9
MIUA_DQ14 MA_DQ14
MIUA_DQ6 RP3 MA_DQ6
MIUA_DQ1 MA_DQ1
MIUA_DQ3 MA_DQ3
MIUA_DQ4 MA_DQ4
MIUA_DQ15 RP5 MA_DQ15
MIUA_DQ8 MA_DQ8
MIUA_DQ10 MA_DQ10
MIUA_DQ13 MA_DQ13
MIUA_DQ7 RP7 MA_DQ7
MIUA_DQ0 MA_DQ0
MIUA_DQ2 MA_DQ2
MIUA_DQ5 MA_DQ5
GND RP9 GND
MIUA_DQS0 MA_DQS0
MIUA_DQS0B MA_DQSB0
GND GND
GND RP117 GND
MIUA_DQS1 MA_DQS1
MIUA_DQS1B MA_DQSB1
GND GND
4*22ohm
4*22ohm
4*22ohm
4*22ohm
4*22ohm
4*22ohm
GND RP2 GND
MIUB_DQS0 MB_DQS0
MIUB_DQS0B MB_DQSB0
GND GND
GND RP4 GND
MIUB_DQS1 MB_DQS1
MIUB_DQS1B MB_DQSB1
GND GND
MIUB_DQ11 RP6 MB_DQ11
MIUB_DQ12 MB_DQ12
MIUB_DQ9 MB_DQ9
MIUB_DQ14 MB_DQ14
MIUB_DQ6 RP8 MB_DQ6
MIUB_DQ1 MB_DQ1
MIUB_DQ3 MB_DQ3
MIUB_DQ4 MB_DQ4
MIUB_DQ15 RP107 MB_DQ15
MIUB_DQ8 MB_DQ8
MIUB_DQ10 MB_DQ10
MIUB_DQ13 MB_DQ13
MIUB_DQ7 RP127 MB_DQ7
MIUB_DQ0 MB_DQ0
MIUB_DQ2 MB_DQ2
MIUB_DQ5 MB_DQ5
4*22ohm
4*22ohm
4*22ohm
4*22ohm
4*22ohm
4*22ohm
U12
H5PS5162FFR
MA_A0 MA_A1 MA_A2 MA_A3 MA_A4 MA_A5 MA_A6 MA_A7 MA_A8 MA_A9 MA_A11 MA_A12 MA_A10 MA_BA0 MA_BA1 MA_BA2
MA_CKE MA_MCLK MA_MCLKZ MA_DQS1 MA_DQSB1
MA_RASZ MA_CASZ MA_WEZ MA_DQS0 MA_DQSB0
MA_DQ0 MA_DQ1 MA_DQ2 MA_DQ3 MA_DQ4 MA_DQ5 MA_DQ6 MA_DQ7 MA_DQ8 MA_DQ9 MA_DQ10 MA_DQ11 MA_DQ12 MA_DQ13 MA_DQ14 MA_DQ15
MA_A13
MA_ODT
MA_DQM1
MA_DQM0
A_MVERF
R63
R70
C212
100ohm
100ohm
1000pF
R99
C213
R159
0.1uF
10Kohm
10Kohm
MIUA_A13 R162 MA_A13
MIUA_ODT R165 MA_ODT
GND RP137 GND
MIUA_DQM1 MA_DQM1
MIUA_DQM0 MA_DQM0
GND GND
GND RP157 GND
MIUA_MCLK MA_MCLK
MIUA_MCLKZ MA_MCLKZ
GND GND
MIUA_WEZ MA_WEZ
MIUA_MCKE MA_CKE
MIUA_BA1 MA_BA1
MIUA_BA0 MA_BA0
MIUA_A4 RP197 MA_A4
MIUA_A6 MA_A6
MIUA_A8 MA_A8
MIUA_A11 MA_A11
MIUA_A5 RP217 MA_A5
MIUA_A10 MA_A10
MIUA_A1 MA_A1
MIUA_BA2 MA_BA2
MIUA_A12 RP237 MA_A12
MIUA_A7 MA_A7
MIUA_A9 MA_A9
MIUA_A3 MA_A3
MIUA_A2 MA_A2
MIUA_A0 MA_A0
MIUA_CASZ MA_CASZ
MIUA_RASZ MA_RASZ
75ohm
75ohm
4*22ohm
4*22ohm
4*75ohm
4*75ohm
4*75ohm
4*75ohm
4*75ohm
MIUB_A13 R164 MB_A13
MIUB_ODT R171 MB_ODT
GND RP147 GND
MIUB_DQM1 MB_DQM1
MIUB_DQM0 MB_DQM0
GND GND
GND RP167 GND
MIUB_MCLK MB_MCLK
MIUB_MCLKZ MB_MCLKZ
GND GND
MIUB_WEZ MB_WEZ
MIUB_MCKE MB_CKE
MIUB_BA1 MB_BA1
MIUB_BA0 MB_BA0
MIUB_A4 RP207 MB_A4
MIUB_A6 MB_A6
MIUB_A8 MB_A8
MIUB_A11 MB_A11
MIUB_A5 RP227 MB_A5
MIUB_A10 MB_A10
MIUB_A1 MB_A1
MIUB_BA2 MB_BA2
MIUB_A12 RP247 MB_A12
MIUB_A7 MB_A7
MIUB_A9 MB_A9
MIUB_A3 MB_A3
MIUB_A2 MB_A2
MIUB_A0 MB_A0
MIUB_CASZ MB_CASZ
MIUB_RASZ MB_RASZ
75ohm
75ohm
4*22ohm
4*22ohm
4*75ohm
4*75ohm
4*75ohm
4*75ohm
4*75ohm
U16
H5PS5162FFR
MB_A0 MB_A1 MB_A2 MB_A3 MB_A4 MB_A5 MB_A6 MB_A7 MB_A8 MB_A9 MB_A11 MB_A12 MB_A10 MB_BA0 MB_BA1 MB_BA2
MB_CKE MB_MCLK MB_MCLKZ MB_DQS1 MB_DQSB1
MB_RASZ MB_CASZ MB_WEZ MB_DQS0 MB_DQSB0
MB_DQ0 MB_DQ1 MB_DQ2 MB_DQ3 MB_DQ4 MB_DQ5 MB_DQ6 MB_DQ7 MB_DQ8 MB_DQ9 MB_DQ10 MB_DQ11 MB_DQ12 MB_DQ13 MB_DQ14 MB_DQ15
MB_A13
MB_ODT
MB_DQM1
MB_DQM0
B_MVERF
R308
R314
C214
100ohm
100ohm
1000pF
R181
C215
R100
0.1uF
10Kohm
10Kohm

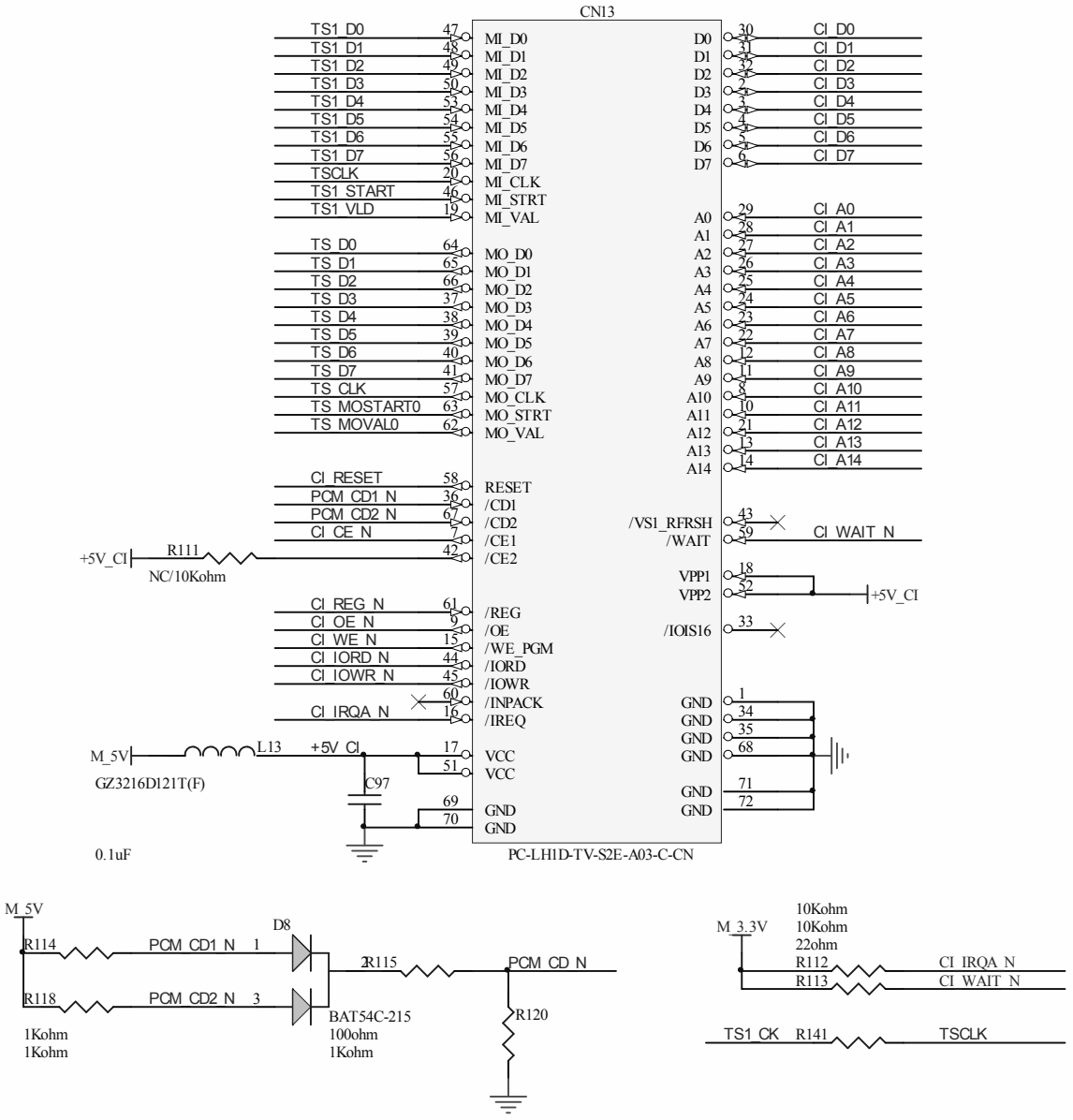
CN13
TS1_D0 47 MI_D0
TS1_D1 48 MI_D1
TS1_D2 49 MI_D2
TS1_D3 50 MI_D3
TS1_D4 53 MI_D4
TS1_D5 54 MI_D5
TS1_D6 55 MI_D6
TS1_D7 56 MI_D7
TSCLK 20 MI_CLK
TS1_START 46 MI_STRT
TS1_VLD 19 MI_VAL
TS_D0 64 MO_D0
TS_D1 65 MO_D1
TS_D2 66 MO_D2
TS_D3 37 MO_D3
TS_D4 38 MO_D4
TS_D5 39 MO_D5
TS_D6 40 MO_D6
TS_D7 41 MO_D7
TS_CLK 57 MO_CLK
TS_MOSTART0 63 MO_STRT
TS_MOVAL0 62 MO_VAL
CI_RESET 58 RESET
PCM_CD1_N 36 /CD1
PCM_CD2_N 67 /CD2
CI_CE_N 7 /CE1
42 /CE2
+5V_CI R111 NC/10Kohm
CI_REG_N 61 /REG
CI_OE_N 9 /OE
CI_WE_N 15 /WE_PGM
CI_IORD_N 44 /IORD
CI_IOWR_N 45 /IOWR
60 /INPACK
CI_IRQA_N 16 /IREQ
M_5V L13 +5V_CI
GZ3216D121T(F)
17 VCC
51 VCC
C97
69 GND
70 GND
0.1uF
D0 30 CI_D0
D1 31 CI_D1
D2 32 CI_D2
D3 2 CI_D3
D4 3 CI_D4
D5 4 CI_D5
D6 5 CI_D6
D7 6 CI_D7
A0 29 CI_A0
A1 28 CI_A1
A2 27 CI_A2
A3 26 CI_A3
A4 25 CI_A4
A5 24 CI_A5
A6 23 CI_A6
A7 22 CI_A7
A8 12 CI_A8
A9 11 CI_A9
A10 8 CI_A10
A11 10 CI_A11
A12 21 CI_A12
A13 13 CI_A13
A14 14 CI_A14
/VS1_RFRSH 43
/WAIT 59 CI_WAIT_N
VPP1 18
VPP2 52 +5V_CI
/IOIS16 33
GND 1
GND 34
GND 35
GND 68
GND 71
GND 72
PC-LH1D-TV-S2E-A03-C-CN
M_5V
R114 PCM_CD1_N 1
D8
R118 PCM_CD2_N 3
BAT54C-215
2R115 PCM_CD_N
R120
1Kohm
1Kohm
100ohm
1Kohm
M_3.3V
10Kohm
10Kohm
22ohm
R112 CI_IRQA_N
R113 CI_WAIT_N
TS1_CK R141 TSCLK

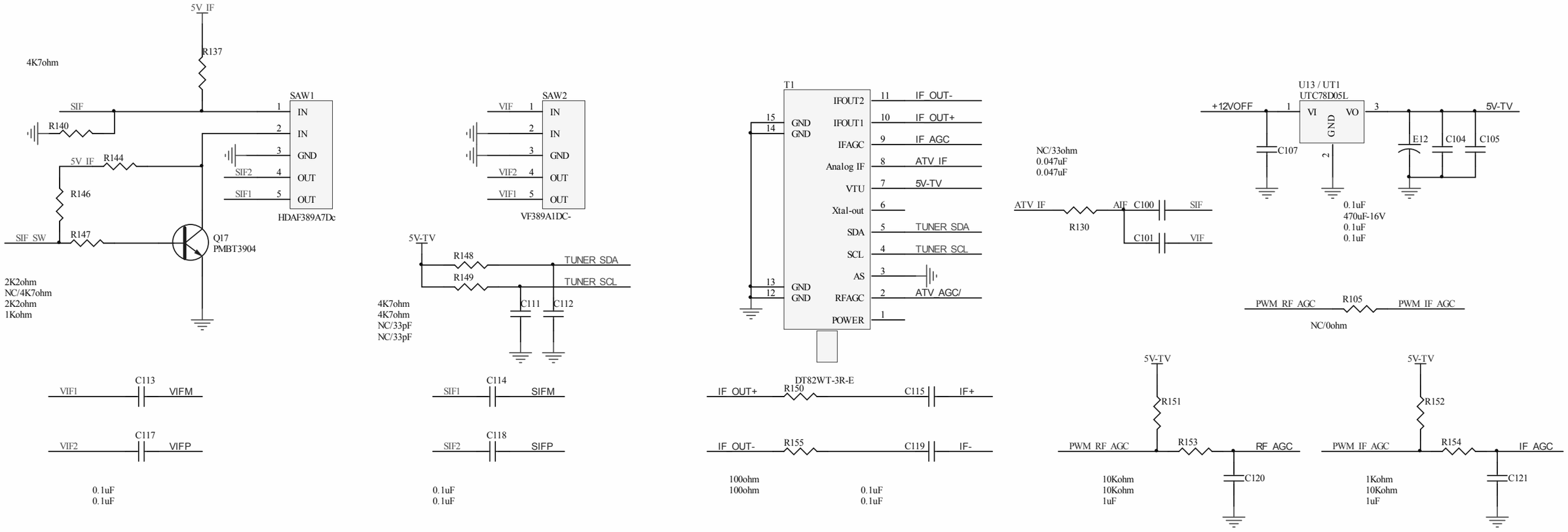
5V_IF
R137
4K7ohm
SIF
R140
SAW1
IN
IN
GND
OUT
OUT
HDAF389A7Dc
5V_IF
R144
SIF2
SIF1
R146
SIF_SW
R147
Q17
PMBT3904
2K2ohm
NC/4K7ohm
2K2ohm
1Kohm
VIF
SAW2
VIF2
VIF1
VF389A1DC-
5V-TV
R148
R149
TUNER SDA
TUNER SCL
C111
C112
4K7ohm
4K7ohm
NC/33pF
NC/33pF
T1
IFOUT2
IFOUT1
IFAGC
Analog IF
VTU
Xtal-out
SDA
SCL
AS
RFAGC
POWER
GND
IF_OUT-
IF_OUT+
IF_AGC
ATV_IF
5V-TV
TUNER SDA
TUNER SCL
ATV_AGC/
DT82WT-3R-E
U13 / UT1
UTC78D05L
+12VOFF
VI
VO
5V-TV
C107
E12
C104
C105
0.1uF
470uF-16V
0.1uF
0.1uF
NC/33ohm
0.047uF
0.047uF
ATV_IF
R130
AIF
C100
C101
SIF
VIF
PWM_RF_AGC
R105
PWM_IF_AGC
NC/0ohm
C113
VIF1
VIFM
C117
VIF2
VIFP
0.1uF
0.1uF
C114
SIF1
SIFM
C118
SIF2
SIFP
0.1uF
0.1uF
R150
IF_OUT+
C115
IF+
R155
IF_OUT-
C119
IF-
100ohm
100ohm
0.1uF
0.1uF
R151
R153
RF_AGC
C120
10Kohm
10Kohm
1uF
R152
R154
IF_AGC
C121
1Kohm
10Kohm
1uF

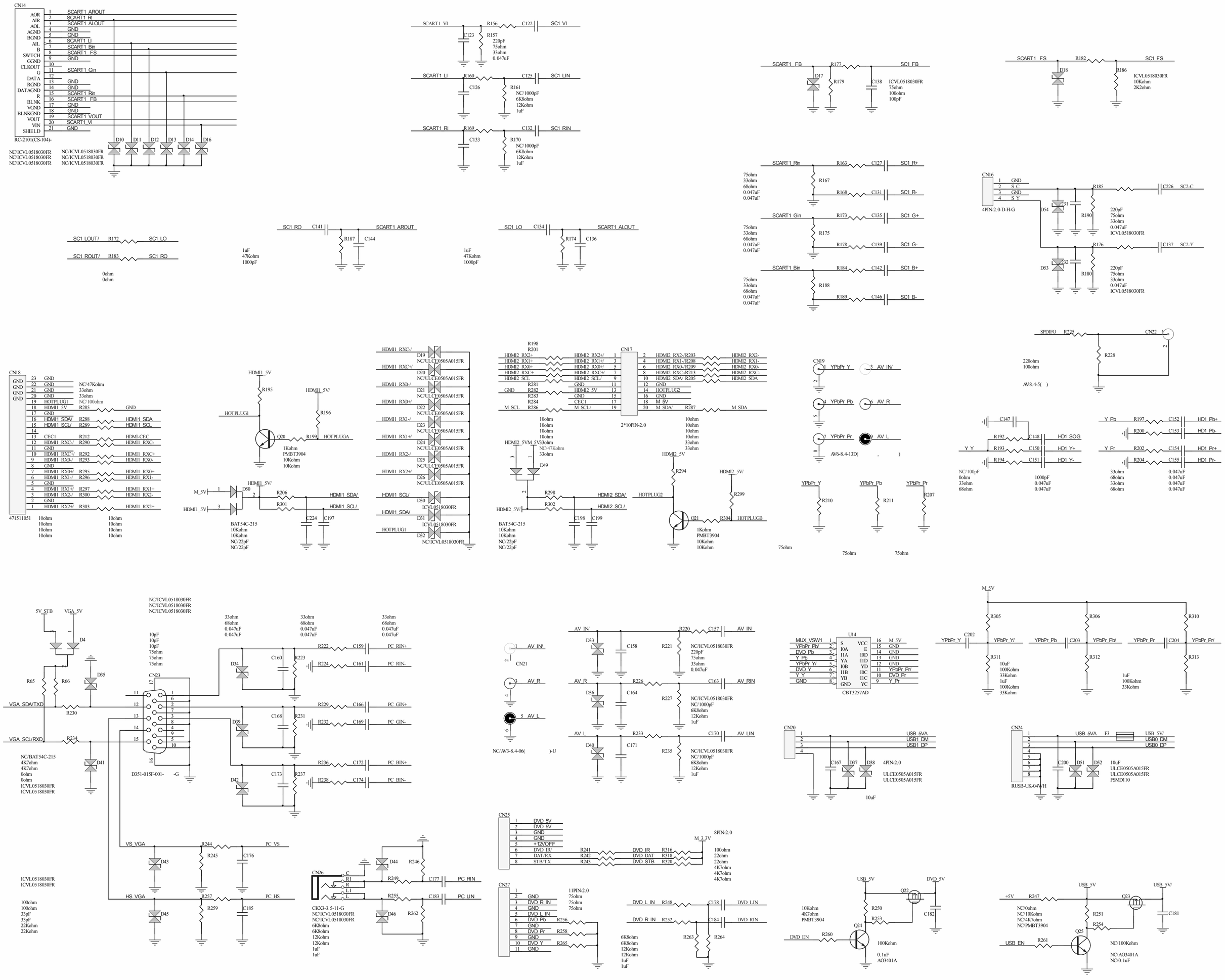
CN14
RC-2101(CS-104)-
SCART1 AROUT
SCART1 RI
SCART1 ALOUT
SCART1 LI
SCART1 Bin
SCART1 FS
SCART1 Gin
SCART1 Rin
SCART1 FB
SCART1 VOUT
SCART1 VI
SCART1 VI
SC1 VI
SCART1 LI
SC1 LIN
SCART1 RI
SC1 RIN
SCART1 FB
SC1 FB
SCART1 FS
SC1 FS
SCART1 Rin
SC1 R+
SC1 R-
SCART1 Gin
SC1 G+
SC1 G-
SCART1 Bin
SC1 B+
SC1 B-
CN16
4PIN-2.0-D-H-G
SC2-C
SC2-Y
SC1 LOUT/
SC1 LO
SC1 ROUT/
SC1 RO
SC1 RO
SCART1 AROUT
SC1 LO
SCART1 ALOUT
SPDIFO
CN22
AV8.4-5( )
CN18
HDMI1 5V
HDMI1 SDA
HDMI1 SCL
HDMI1 RXC+
HDMI1 RXC-
HDMI1 RX0+
HDMI1 RX0-
HDMI1 RX1+
HDMI1 RX1-
HDMI1 RX2+
HDMI1 RX2-
HOTPLUG1
HOTPLUGA
HOTPLUGB
HOTPLUG2
CN17
2*10PIN-2.0
CN19
YPbPr Y
AV_IN/
YPbPr Pb
AV_R
YPbPr Pr
AV_L
AV6-8.4-13D(,)
CN20
USB_5VA
USB1_DM
USB1_DP
CN24
USB_5VA
USB_5V/
USB0_DM
USB0_DP
RUSB-UK-04W/H
CN21
AV_IN/
AV_R
AV_L
NC/AV3-8.4-06( )-U
U14
CBT3257AD
MUX_VSW1
YPbPr_Pb/
DVD_Pb
Y_Pb
YPbPr_Y/
DVD_Y
Y_Y
GND
M_5V
YPbPr_Pb/
YPbPr_Pr/
DVD_Pr
Y_Pr
CN23
D351-015F-001- -G
VGA_SDA/TXD
VGA_SCL/RXD
VGA_5V
5V_STB
PC_RIN+
PC_RIN-
PC_GIN+
PC_GIN-
PC_BIN+
PC_BIN-
VS_VGA
HS_VGA
PC_VS
PC_HS
CN26
CKX3-3.5-11-G
PC_RIN
PC_LIN
CN25
8PIN-2.0
DVD_5V
+12V/OFF
DVD_IR/
DAT/RX
STB/TX
DVD_IR
DVD_DAT
DVD_STB
M_3.3V
CN27
11PIN-2.0
DVD_R_IN
DVD_L_IN
DVD_Y
DVD_L_IN
DVD_R_IN
DVD_LIN
DVD_RIN
USB_5V
DVD_5V
DVD_EN
USB_EN
+5V
USB_5V/
Q22
Q23
Q24
Q25
BAT54C-215
BAT54C-215
D351-015F-001-G
CKX3-3.5-11-G
RUSB-UK-04W/H
CN22
CN19
CN20
CN24
CN25
CN27
CN16
CN17
CN18
CN14

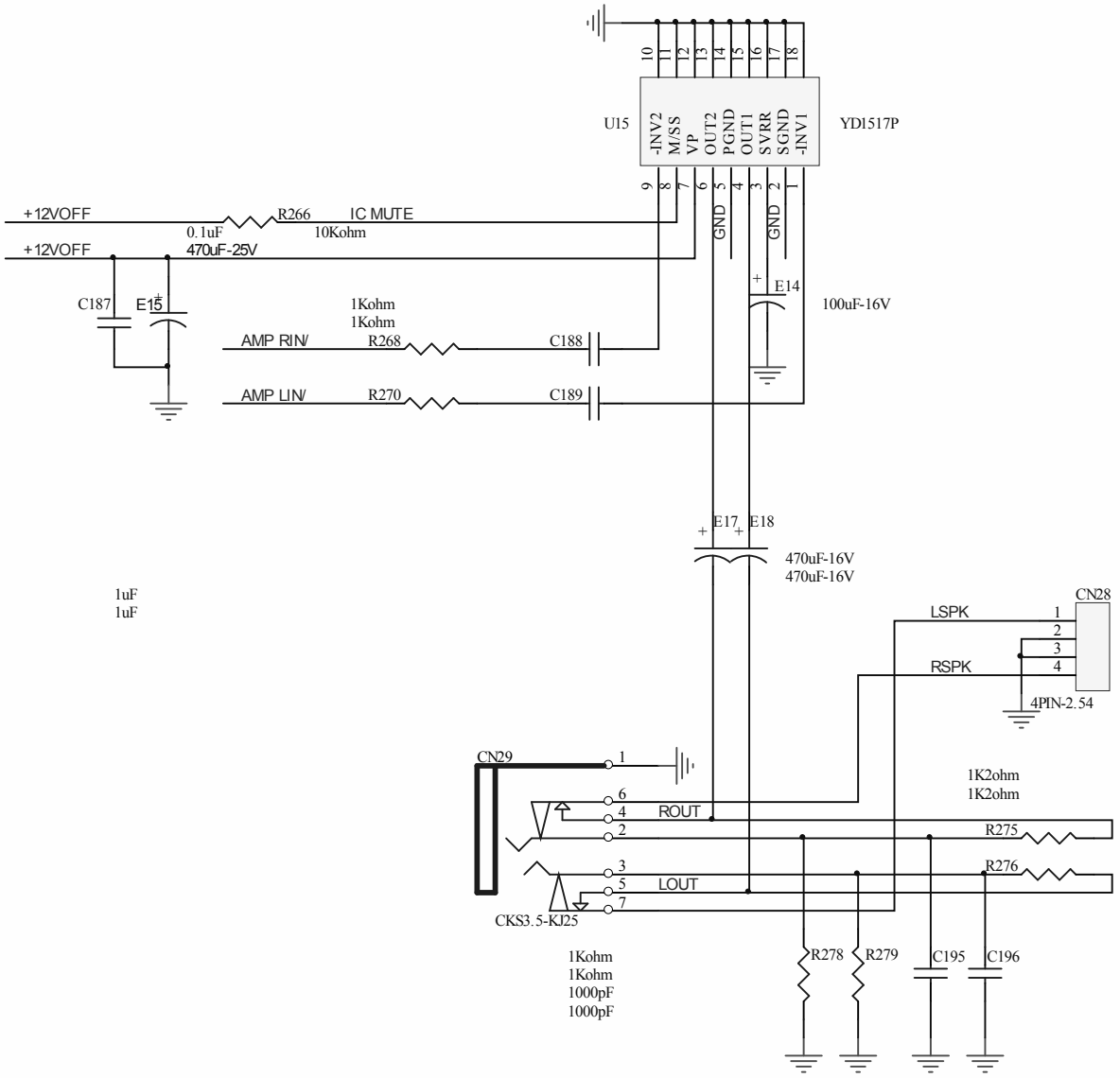
U15
YD1517P
-INV2
M/SS
VP
OUT2
PGND
OUT1
SVRR
SGND
-INV1
GND
GND
+12VOFF
+12VOFF
R266
IC MUTE
10Kohm
0.1uF
470uF-25V
C187
E15
E14
100uF-16V
1Kohm
1Kohm
AMP RIN/
R268
C188
AMP LIN/
R270
C189
E17
E18
470uF-16V
470uF-16V
1uF
1uF
CN28
LSPK
RSPK
4PIN-2.54
CN29
ROUT
LOUT
CKS3.5-KJ25
1K2ohm
1K2ohm
R275
R276
1Kohm
1Kohm
1000pF
1000pF
R278
R279
C195
C196